Electronics Documentation

1. Electronics Block Diagram

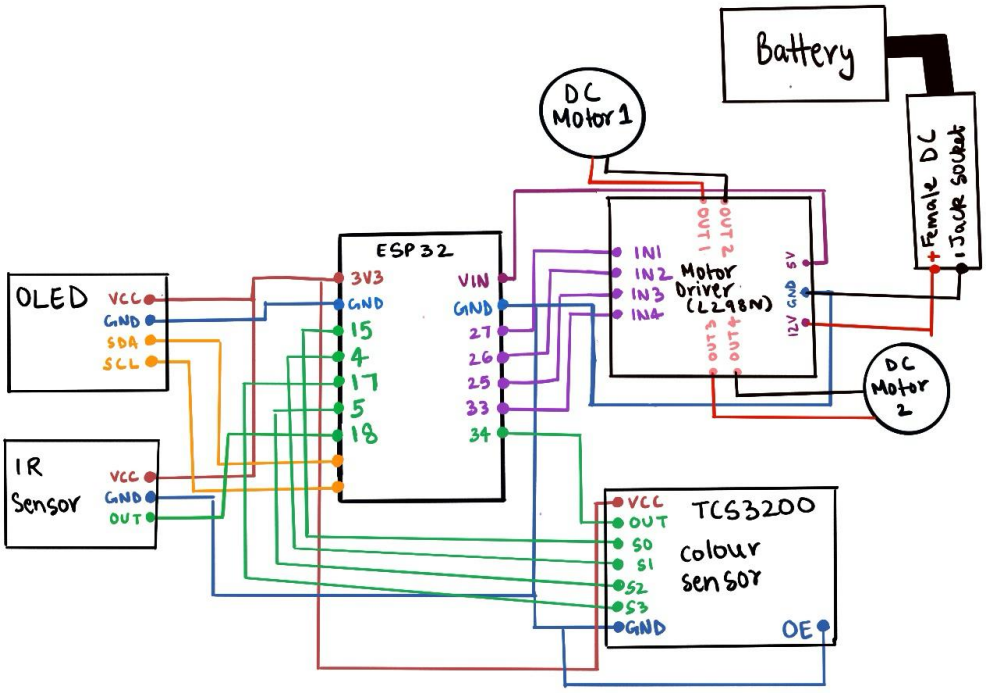

2. Components Table

Component	Quantity	Purpose	Justification
DC Motor	2	To move the wheels of the robot.	DC motors offer the necessary torque and easy speed control required to drive the robot's wheels, and two motors enable accurate turning and navigation.
IR Sensor	1	To detect the contrast between the black line and the lighter floor so the robot can follow the path accurately.	IR sensors detect the contrast between dark and light surfaces by measuring IR reflection. Dark lines absorb more light, helping the robot identify the path.
Motor Driver (L298N)	1	To control the speed and direction of the	A motor driver acts as an interface between the microcontroller and

		motors based on signals from the controller.	motors, supplying the required current and allowing precise control of movement (forward, backward, turning). It protects the controller and ensures smooth, reliable operation of the robot.
OLED Display	1	To display expressions of the robot.	An OLED display is small, bright, and low-power, making it ideal for showing clear expressions on the robot.
TCS3200 (Colour sensor)	1	To identify and differentiate colour-coded sections within the maze.	The TCS3200 detects RGB light intensity to identify colours accurately, allowing the robot to recognize different maze zones.
Battery	1	To supply power to the motor driver and ESP32, enabling the system to operate without a laptop.	A battery provides portable, stable power with the required voltage and current for the ESP32 and motor driver, enabling independent operation.
ESP 32	2	1- Processes input from sensors and generates control signals for robot movement.	ESP32 is a powerful microcontroller capable of real-time processing and multiple output control, allowing it to efficiently manage motor operations and sensing tasks simultaneously.